IMS CONNECT –

IMS Connect architecture is designed to support any clients communicating with socket calls. One of the clients of IMS Connect is IMS Connector for Java, which is a collection of Java classes that enable a Java application to communicate data requests to IMS Connect.

IMS Connect executes on the z/OS environment and allows TCP/IP clients or local z/OS clients to send messages to IMS. IMS Connect uses the IMS Open Transaction Manager Access (OTMA) interface and the MVS Cross Coupling Facility (XCF) to communicate with IMS.

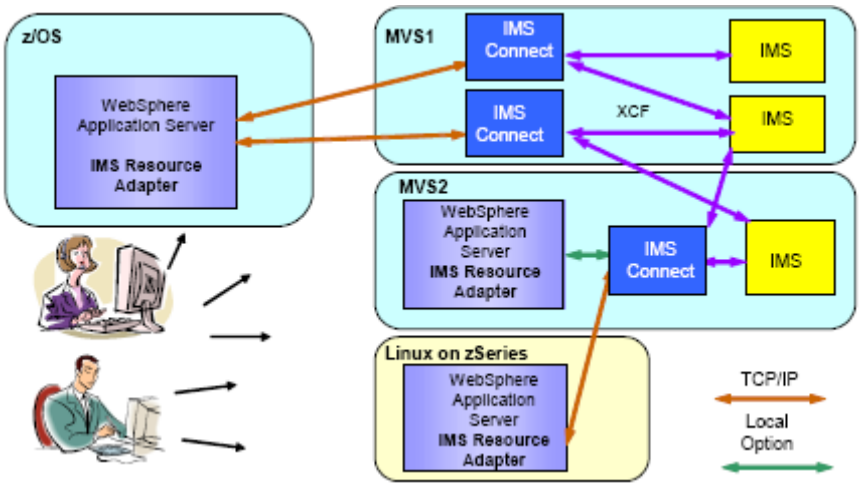

If your customer is interested, IMS Connect provides for a Local Option support, which is a means of communicating from WebSphere for z/OS to IMS Connect through the Resource Adapter.

This Local Option provides a non-socket Multiple Virtual Storage (MVS) program call , access to IMS transactions and data from the Application Server when Websphere, IMS Connector for Java, and IMS Connect are all running in the *same* MVS image.

The Local Option also supports two-phase commit using RRS. If Websphere Application Server and IMS Connect are on the same z/OS image, you can use either the Local Option or TCP/IP.

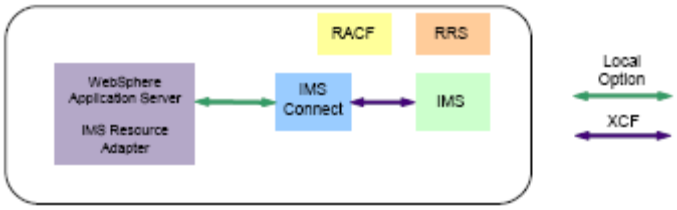

Same LPAR

Use the Local Option for highest throughput and performance. It uses a non-network communication method to access IMS. This provides a tight integration between the application server and the IMS subsystem because there is no networking involved since it uses the *cross memory facility* inherent on z/OS. When you execute a global transaction with Local Option, WebSphere, IMS Connector for Java, IMS Connect and RRS must all reside in the same z/OS image. In this case, the WebSphere Application Server for z/OS Transaction Manager exploits RRS to coordinate the transaction, rather than using the XA protocol with TCP/IP. RRS should provide a performance benefit over TCP/IP using the XA protocol.

Although local connections to IMS subsystems provide better performance, there are other considerations. When accessing an a subsystem locally, there is no fail-over. You are not managing the workload for this connection. As a result, if the local subsystem goes down, your connection is not going to be routed to another system in the sysplex.

If your customer needs a design for workload balancing between Websphere Application Server and the subsystems, they should consider using a remote connection through one of the various mechanisms such as Sysplex Distributor or WAS XD's ODR.

The status of the IMS database is sent to IMS Connect from OTMA through XCF. If the database goes down, IMS Connect is notified and automatically reconnects to the data store when it is restarted. Customers do not need to manually reconnect to the database. This option has the least availability since each point of interaction can be subject to failure. You can automate monitors to ensure each server component is executing as expected.

The Automatic Restart Manager (ARM) can be considered to decrease the outage time in a production IMS.

The IMS Resource Adapter passes the security information, user ID and optional group name that it receives from WebSphere to IMS Connect in an OTMA message. WebSphere Application Server works this way using the Local Option with container-managed sign-on. *I'm not strong on security so I'll leave this topic to an SME.*

Websphere Application Server uses RRS with an extension incorporating the J2EE Connector Architecture (J2CA) resource adapter specification, supporting transaction processing. The local configuration is the only configuration in which IMS Connector for Java runs as an RRS-transactional connector.

To use transaction support with IMS Connector for Java, use either the JTA transaction interface, or set an appropriate transaction attribute in the deployment descriptor (for example, TX_REQUIRED) in your application. The customer can have conversational and non-conversational transaction capability. The resource adapter, when running global transactions with the Local Option, does not use the X/Open (XA) protocol.

If there is an error during processing, both IMS and WebSphere Application Server for z/OS rely on the underlying RRS subsystem to handle the rollback. In the case of in-flight transactions, RRS notifies all participants that a rollback is required and normal rollback processing occurs.

Although, not illustrated, the customer can have more than one IMS Connect within an LPAR for connector scalability. However, a single IMS Connect can handle a very high transaction volume, therefore multiple instances of IMS Connect are not usually required for scalability.

Another configuration for multiple IMS instances is using a single IMS Connect to support one or multiple IMS systems. Multiple IMS Connects can be used to access one IMS system. An IMS Connect system can reside on the same LPAR image as its target IMS, or can cross a system boundary, assuming that the environment is sysplex-enabled. IMS Connect uses XCF to talk to the local IMS1 and uses XCF and the Coupling Facility to talk to the remote IMS2. The client in both cases is WebSphere Application Server.

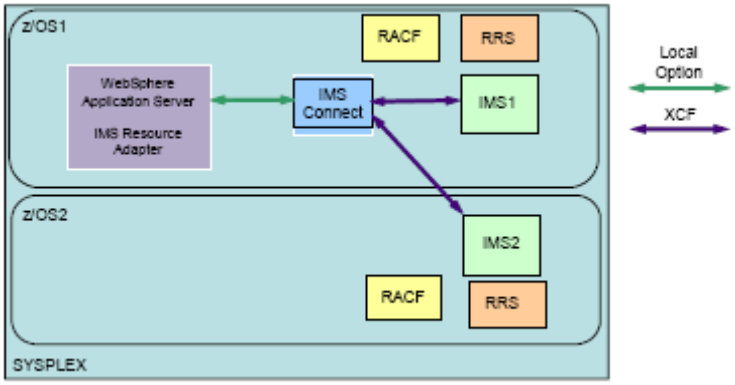

This above configuration can implement message queue sharing. This support allows multiple IMS subsystems to share the same IMS full-function message queues and the same Fast Path Expedited Message Handler (EMH) queues. Sharing of the same message queue between multiple IMS subsystems provides fuller exploitation of the power of the Parallel Sysplex, providing workload balancing and increased availability.

Also under this configuration, a single IMS Connect, can be configured to support a very high transaction rate. In this scenario there are two separate IMS systems residing in different LPARs within the same Sysplex, displaying a combination of local and remote processing. The local service time will have better response than the remote because inter-LPAR communication is not involved.

But, there is a cost to data-sharing with shared message queues. These performance costs arise from exercising the Parallel Sysplex functions and are variable. Hardware configurations and workload characteristics, such as the amount of sharing required by applications, are all factors in the evaluation of the performance of your customer's environments.

Using this configuration this scenario contains a number of single points of failure. If LPAR1, the Websphere Application Server in it, or IMS Connect fails, then both IMS systems are affected. For availability, several IMS Connects can be configured to communicate with multiple IMS systems within a sysplex.

Use shared message queues by using the Coupling Facility list structures. If one IMS subsystem fails, the rest of the IMS subsystems sharing the message queues can continue to process work, including any message placed on the shared queues by the failed IMS subsystem. IMS Connect and the IMS database must be in the same XCF Group in order to communicate. As far as some security information, the customer can assign a thread identifier as an owner of a Local connection (IMS1), when you first obtain the connection. In terms of thread identity we refer to the J2EE Identity, the *RunAs* Identity, for example. When you use the Local Option and IMS Connect is configured to use RACF, it will authenticate every request unless the exits are used to enable trusted user support.

Under this configuration, Websphere Application Server supports the coordination of resource managers through their RRS and XA Resource interface and participates in distributed global transactions with other Object Transaction Service (OTS) compliant transaction managers.

As mentioned previously, a single IMS Connect can sustain a high transaction rate and therefore scalability may not be required. Implementing shared message queuing, a message placed on the shared queue can be processed by any IMS in the Sysplex, thus increasing capacity.

Finally, this last illustration shows a high availability WebSphere cluster with local connections to IMS Connect. Each WebSphere cluster member can talk to a single IMS Connect. This can cause availability problems, in fact the storm drain[Ŧ] can happen if IMS Connect goes down. The IMS Connect can talk to a shared queue to get to multiple IMS servers. As stated earlier, Local connection means that all local security benefits like thread indentity apply. On the other hand the local IMS connection has less features than the remote TCP/IP.

> **NOTE:** The SD refers to Sysplex Distributor, but there are other options and shown here as an example. If your customer needs further information on SD, please let me know.

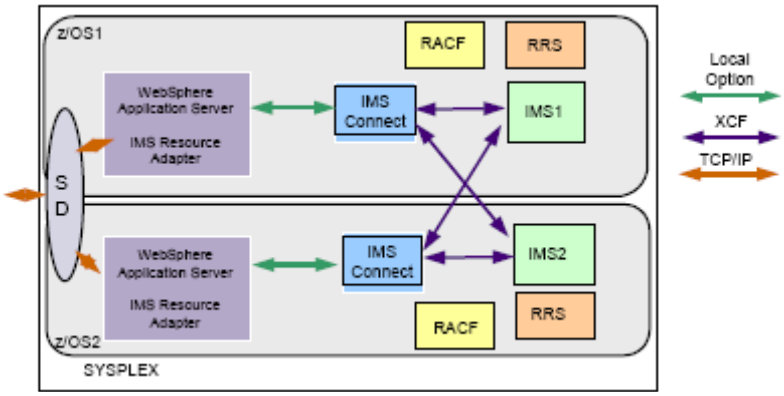

Emphasizing again, a single IMS Connect can be configured to support a very high transaction rate. In the above scenario we have two separate IMS systems residing in different LPARs within the same Sysplex, a combination of local and remote processing. The local service time will have better response than the remote since inter-LPAR communication is not involved. There is a cost to data sharing with shared message queues. The performance costs that arise from exercising the Parallel Sysplex functions are variable. Hardware configurations and workload characteristics, such as the amount

of sharing required by applications, are all factors in the evaluation of the performance of customer environments.

As in previous topologies, to increase availability, several IMS Connects can be configured to communicate with multiple IMS systems within a sysplex.

As WebSphere and IMS Connect have local connection, they can benefit from the thread identity support. Here, thread Identity support is used to flow the current thread identity to the back-end IMS Connect and IMS. Most z/OS customers will want to use this feature because it enables WebSphere for z/OS to behave in a way that traditional z/OS address spaces behave, that is, once you have authenticated, your user ID flows with any work you do within the z/OS system.

NOTE: Distributed WAS today, can't take advantage of IMS Connect. Although the SOD is that IMS 11 will announce Open Database which provides access to IMS DB via IMS Connect. Therefore, WebSphere can be on any platform. Ken Blackman at IMS' ATS can fill in more detail on this topic.

- - -

[Ŧ] In later releases of z/OS (1.8 >) the storm drain issue was corrected by placing a daemon listener that assess a health-check value for Sysplex routing services.
See #07 zTidBit@CPO (Fix the Storm Drain) for further information.

jkettner@us.ibm.com