w3 COMP IBM.

Kettner's Corner #12 - zTidBit@CPO (The JES')

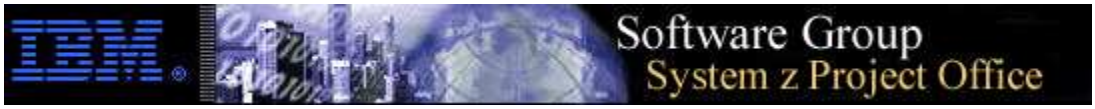

John Kettner is a member of the Z CPO team and teaches classes on z/OS fundamentals to customers and IBMers. John will share his expertise sharing his answers on key questions and topics on Z.

Check out the System z Project office Website: http://w3.ibm.com/sales/competition/compdlib.nsf/weball/9CF22F2F65E01639872571 OpenDocument

06/06/07 - #12 zTidBit@CPO (The JES')

Technical Rating: *** (HIGH): 6+ years mainframe
for this doc. **** (MEDIUM): 2- 6 years mainframe**
(see **BOLD**) * (LOW): 1 - 2 year(s) mainframe

IBM's Job Entry Subsystem (JES) is a required and strategic part of the z/OS operating system. IBM offers two JES choices: JES2 and JES3. JES3 is the considered the premium choice and incurs additional license fees. Choosing which option in zOS as a primary JES is no small task. If a customer's installation has only one zOS image, then both JES2 and JES3 perform similar functions, They read jobs into the system, converting them to internal machine-readable form, manage initiators, process output, purge jobs from the system, and so forth. However, there are significant differences in their processing paradigms, especially noticeable when running a multi-image configuration

where JES3 provides additional features related to job scheduling.

JES (Common Functions)

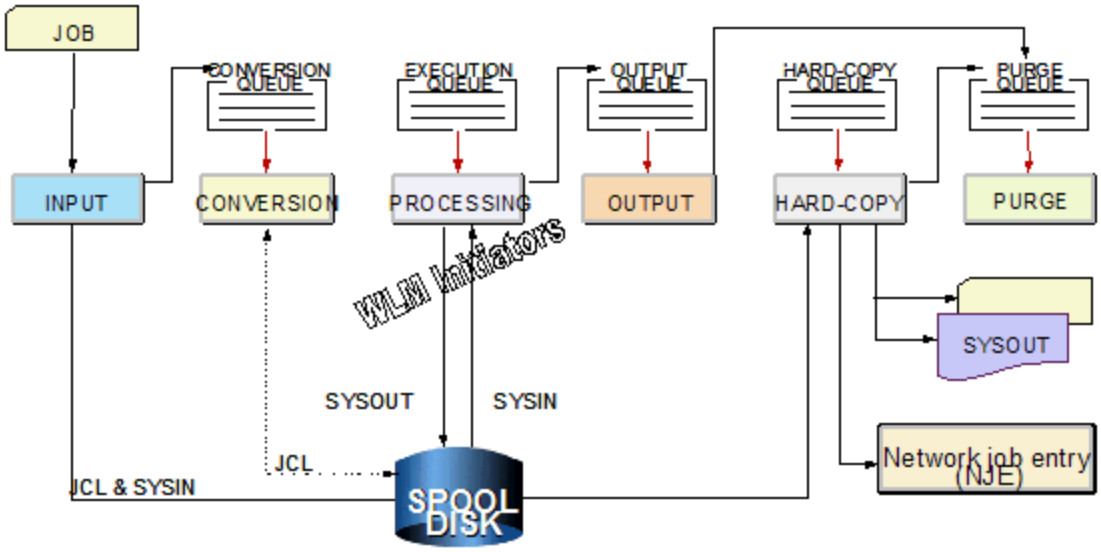

When a customer has more than one zOS image and they are running JES2, then JES2 in each ZOS image exercises independent control over its job processing functions. That is, within the configuration, each JES2 processor controls its own job input, job scheduling, and job output processing. Although, if an installation has more than one zOS image in a configuration, then the scheduling functions of a JES3 has benefits.

JES2

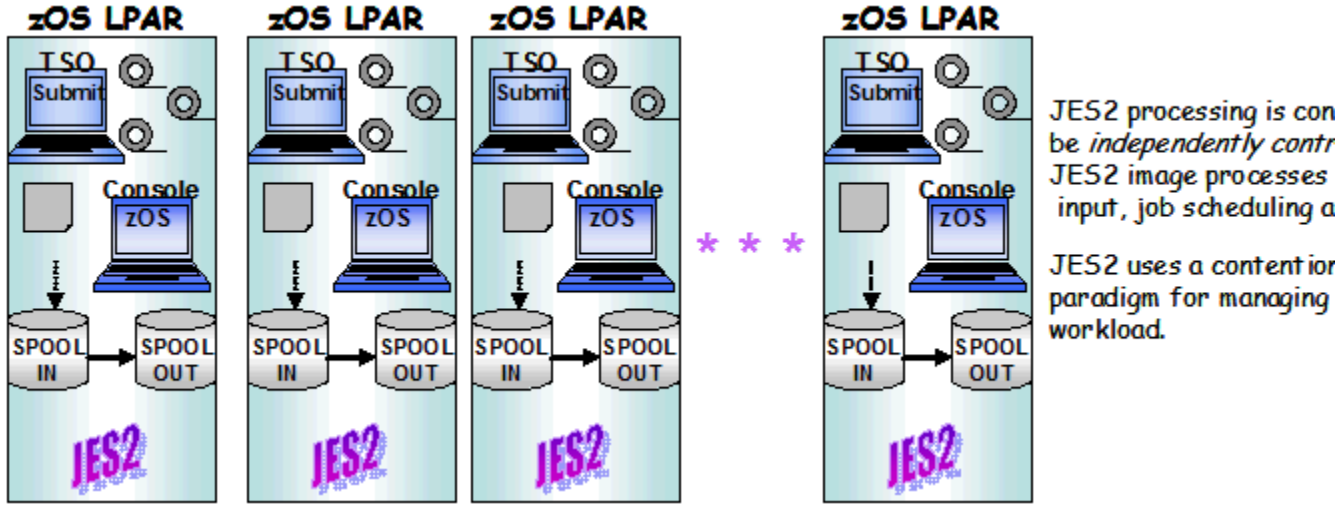

The alternative option in a sysplex is your

installation designates one processor as the focal point for the entry and distribution of jobs and for the control of resources needed by the jobs. In this JES3 environment, however, one zOS image hosts a JES3 that performs centralized control over its and the other zOS images' functions. This JES3 is called *JES3 global processor*; the JES3 instances in the other ZOS images are called *JES3 local processors*. It is from the global processor that JES3 manages jobs and resources for the entire complex, matching jobs with available resources. JES3 ensures that they are available before selecting the job for processing. JES3 manages processors, I/O devices, volumes, and data and is much more robust and sophisticated. To avoid delays that result when resources are not available, JES3 ensures that they *are* available before selecting the job for processing.

JES3 keeps track of I/O resources, and manages workflow using the workload management component of zOS by scheduling jobs for processing on the processors where the jobs can run most efficiently. At the same time, JES3 maintains data integrity. JES3 will not schedule two jobs to run simultaneously anywhere in the complex if they are going to update the same data.

JES3

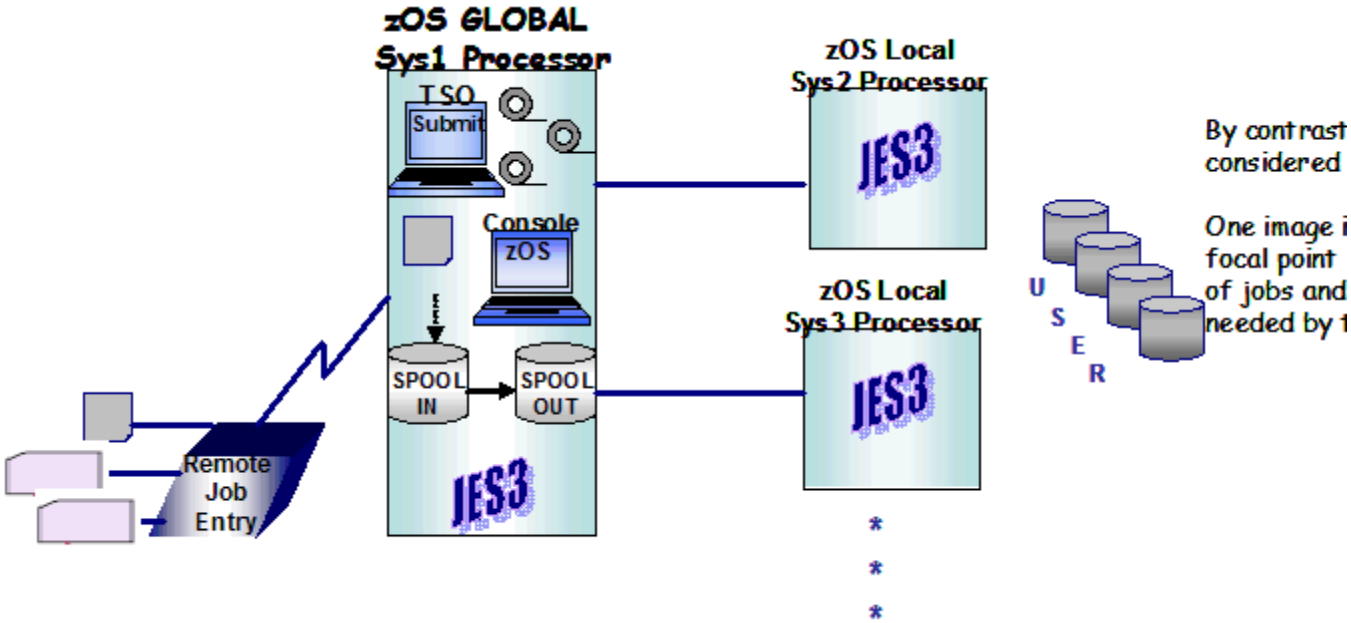

JES2 allows only 36 job classes (A-Z, 0-9) to be defined. Each job class is only one character in length. JES3 allows for up to 255 job classes. JES3 job class names may be up to eight characters in length, allowing for mnemonic, self-documenting names like PRODWORK, DEVWORK, IMSA, etc. to be used. JES3 job classes may be grouped together into up to 255 job class groups. Job class groups allow operators and system programmers to define and control many job classes in a single operation. JES3 also provides job class constraints. These optional parameters influence the way jobs are scheduled.

If you have question for John, send him an email at: John H Kettner/New York/IBM.

For a direct link to the Z Project Office Website Click Here:http://w3.ibm.com/sales/competition/compdlib.nsf/weball/9CF22F2F65E0163987OpenDocument

---

Document details

Date: Jun. 6, 2007

Content owner:
John H Kettner

For IBMers only. Not intended for business partners or customers.

Report handling guidelines

Content provider:
IBM SWG Competitive Project Office

Feedback

Tag and save this page to your dogear favorites.

What is dogear ?