w3 COMP IBM.

Kettner's Corner #05 - zTid-Bits@CPO (Channel Subsystem terms and definitions)

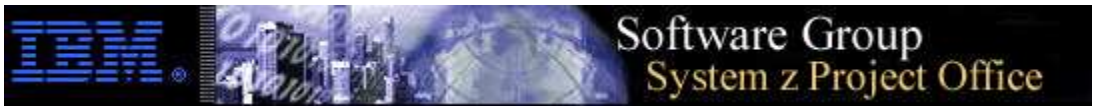

John Kettner is a member of the Z CPO team and teaches classes on z/OS fundamentals to customers and IBMers. John will share his expertise sharing his answers on key questions and topics on Z.

Check out the System z Project office Website: http://w3.ibm.com/sales/competition/compdlib.nsf/weball/9CF22F2F65E01639872571 OpenDocument

12/13/06 #05 zTidBits@CPO (Channel Subsystem terms&defs.)

This is a general **overview of terms and definitions** (along with illustrations) used in the mainframe's Channel Architecture. It's this robust technology that provides the platform its exceptional commercial processing capability that's used throughout the world's enterprises.

The channels in the Channel Subsystem (CSS) permit the transfer of data between main storage and I/O devices or other servers under the controls of a channel program. Through these channel connections, the CSS enables communication from server memory to peripherals (I/O devices).

The CSS allows channel I/O operations to continue independently of other operations within the server. This allows other

functions to resume after an I/O operation has been initiated.

The Channel Subsystem on previous generation mainframes such as z900 only had up to 256 channel paths. Although due to new advances in scalability, today's z990 and z9 machines can have over 1000. A channel path is a single interface between a server and one or more control units. Commands and data are sent across a channel path to perform I/O requests.

A brief description of some entities and terms that encompass the CSS follows:

Channels

A channel is the communication path from the Channel Subsystem to the connected control units and I/O devices). The channel subsystem communicates with I/O devices by means of channel paths between the channel subsystem and control units.

Channel Path Identifier (CHPID

A Channel Path Identifier (CHPID) is a value assigned to each channel path of the system that uniquely identifies that path. A total of 256 CHPIDs are supported by the CSS. On the z900 and z800 a CHPID number is assigned to every installed and active channel by the server and may be changed by the IBM Service Representative. On the z9, z990, and z890 a CHPID number is assigned to a physical location by the user via HCD or IOCP.

Note: The implementation on the z890 and z990 and later machines use a new feature called Multiple-Channel Subsystem (MCSS) and uses a different a mapping scheme between a physical channel (PCHID) and its legacy defined Channel Identifiers (CHPIDs). This provides for a CSS to provide up to 65,280 channel paths.

Subchannels

A subchannel provides the logical appearance of a device to the program and contains the information required for sustaining a single I/O operation. A

subchannel is assigned for eachdevice defined to the logical partition.

Control units

A control unit provides the logical capabilities necessary to operate and control an I/O device and adapts the characteristics of each device so that it can respond to the standard form of control provided by the CSS. A control unit may be housed separately, or it may be physically and logically integrated with the I/O device, the channel subsystem or within the server itself.

I/O devices

An input/output (I/O) device provides external storage, a means of communication between data-processing systems, or a means of communication between a system and its environment. In the simplest case, an I/O device is attached to one control unit and is accessible through one channel path. These figures depicts the relationship between the
Channel Subsystem, the channels, the control units and the I/O devices.

Channel Subsystem Overview

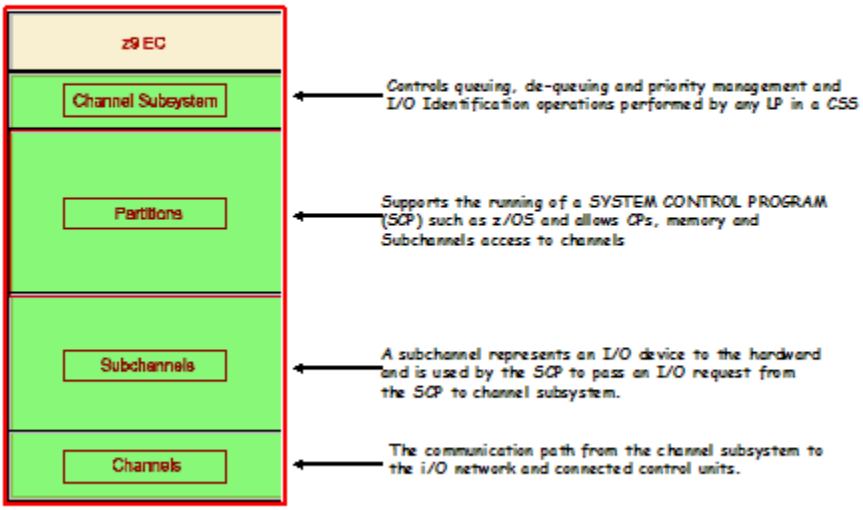

Topology Example with disk devices

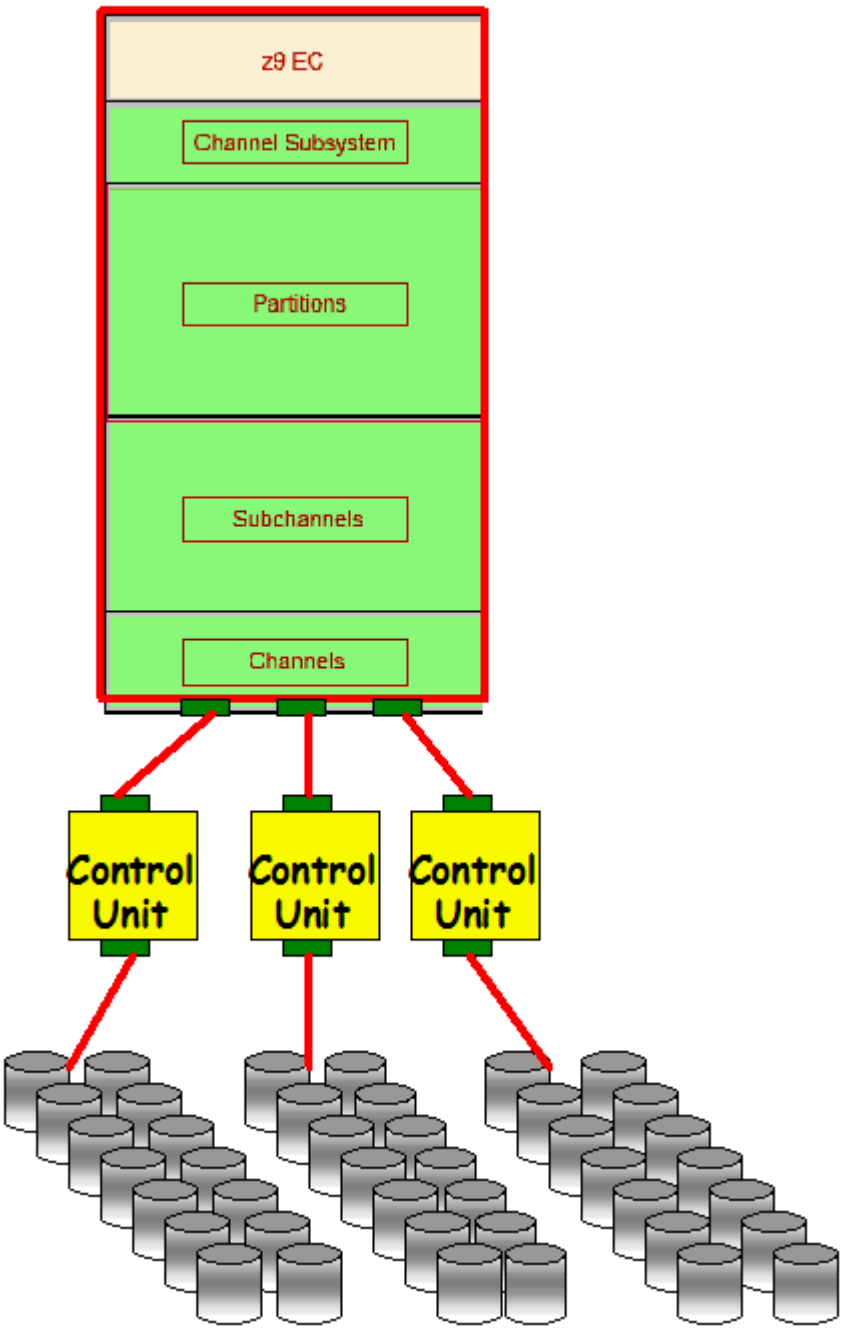

If you have question for John, send him an email at: John H Kettner/New York/IBM.

For a direct link to the Z Project Office Website Click Here:http://w3.ibm.com/sales/competition/compdlib.nsf/weball/9CF22F2F65E0163987

OpenDocument

Document details

Date: Dec. 13, 2006

Content owner: John H Kettner

For IBMers only. Not intended for business partners or customers.

Report handling guidelines

Content provider: IBM SWG Competitive Project Office

Feedback

Tag and save this page to your dogear favorites.

What is dogear ?